Presenting

Replacing Throttle Valves with Variable Speed Devices (VSDs) for Energy Savings

By

Chip Corbin & Rich Braun

Why a Need for Speed Control ?

- Motors run at only one speed (1200 – 3600 rpm)
- Most pumping applications need flow control and more often than not, a Throttling Valve is the installed solution.
- The Problem: Throttling valves Waste Energy

FLUXDRIVE

Potential Energy Savings:

US Industrial Energy Usage

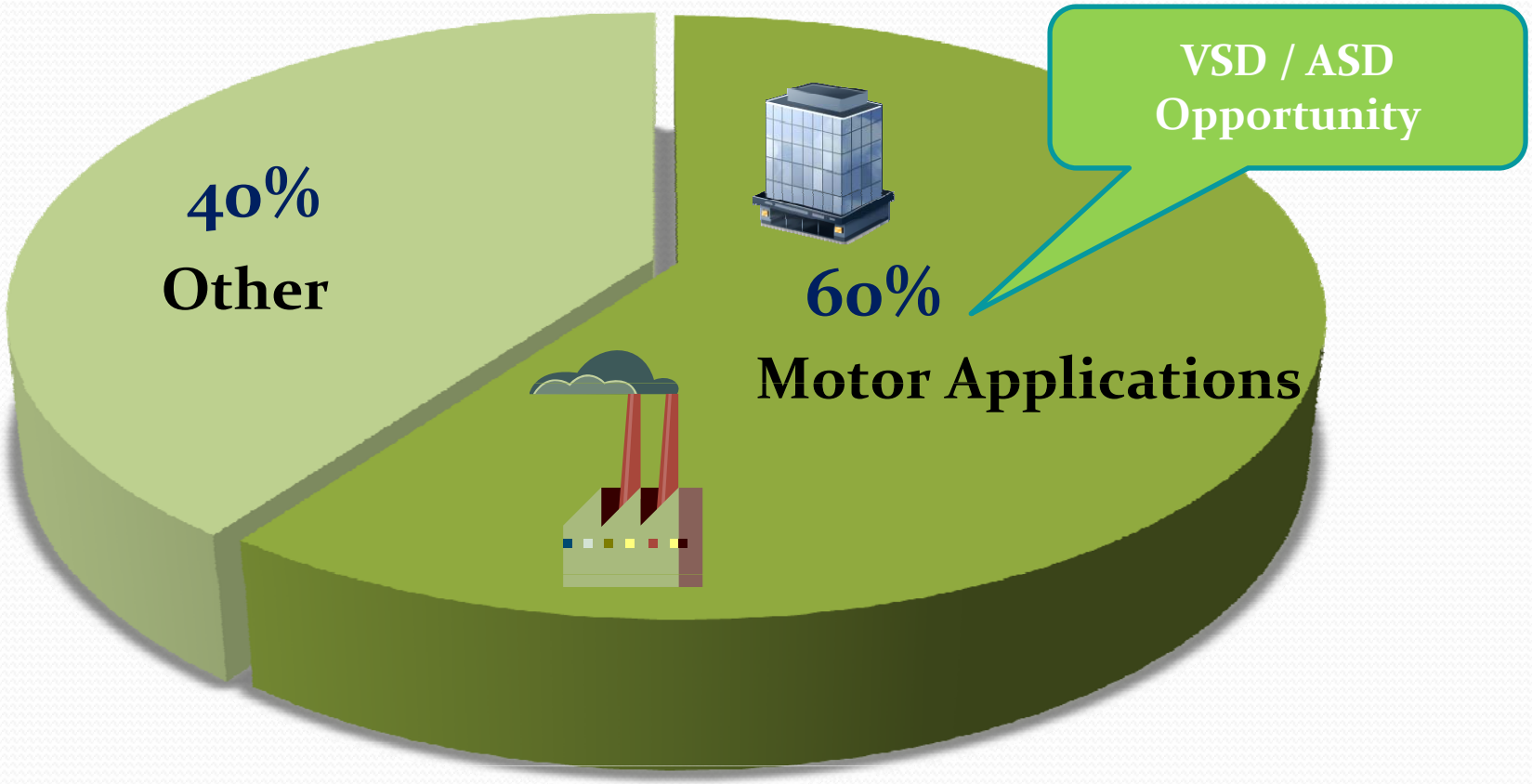

* Data taken from "United States Industrial Electric Motor Systems Market Opportunities Assessment" December 2002 - Energy savings based on 2002 energy prices.

Flow Diagram (Max. Flow –Max. Power)

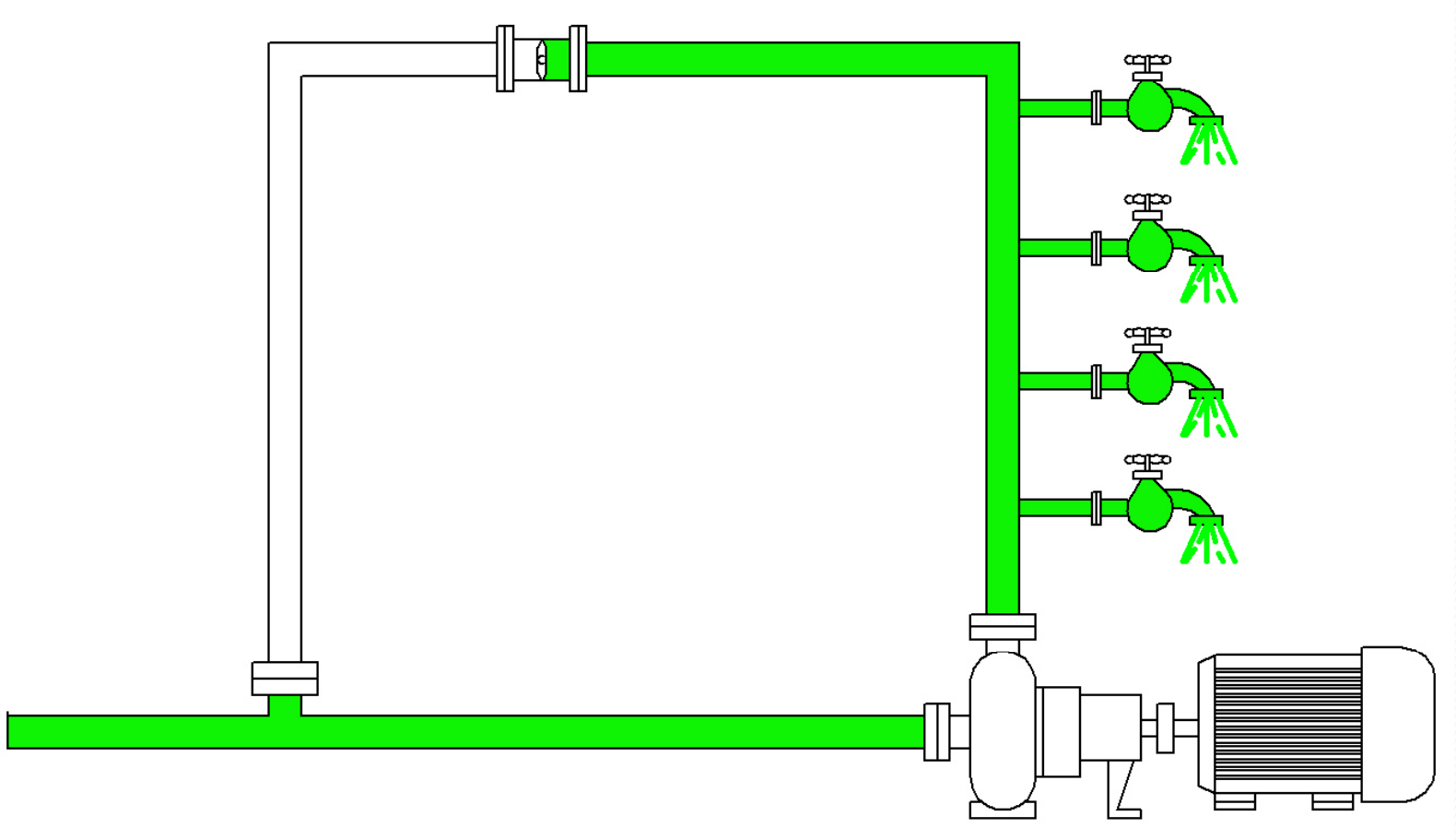

Constant Speed Motor

FLUXDRIVE

Problem: 95% Power @ 50% Flow

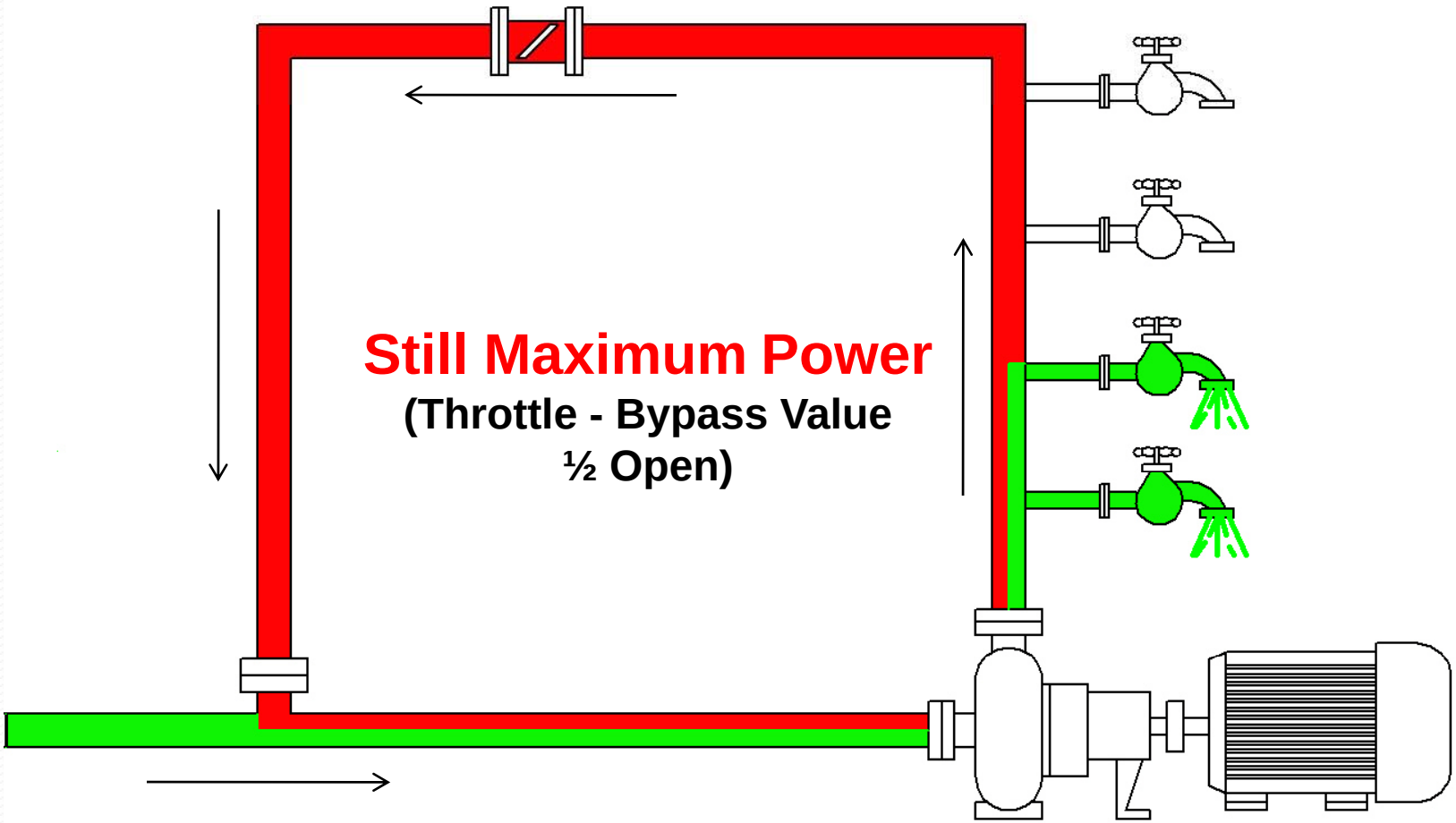

Constant Speed Motor

FLUXDRIVE

Solution: Reduce Pump Speed & Power Using a VFD or Flux Drive VSD

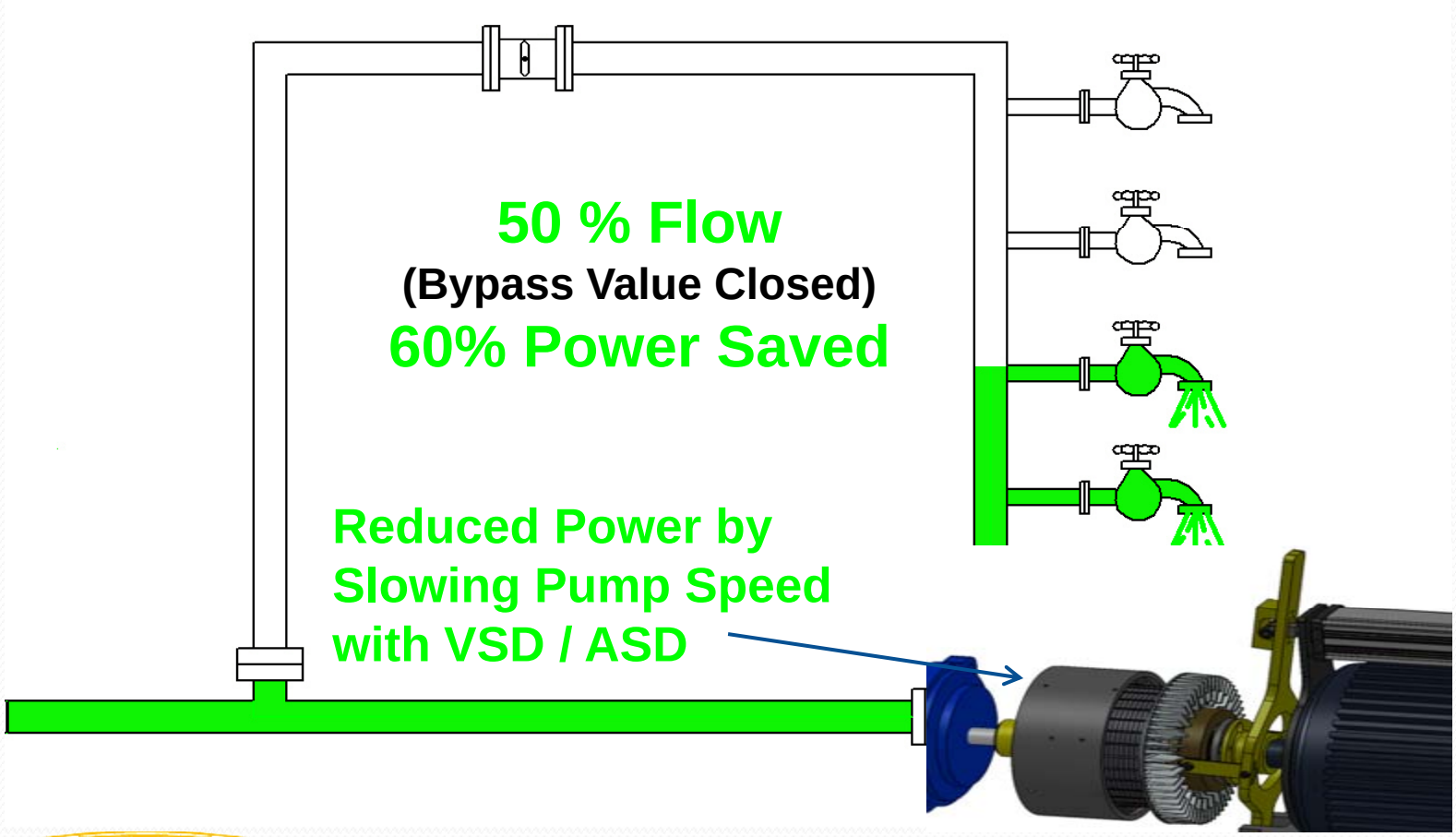

FLUXDRIVE

Variable Speed Pump and Constant Speed Motor

Example – Throttling Valve - System

FLUXDRIVE

Example – Valve Open - Full Power

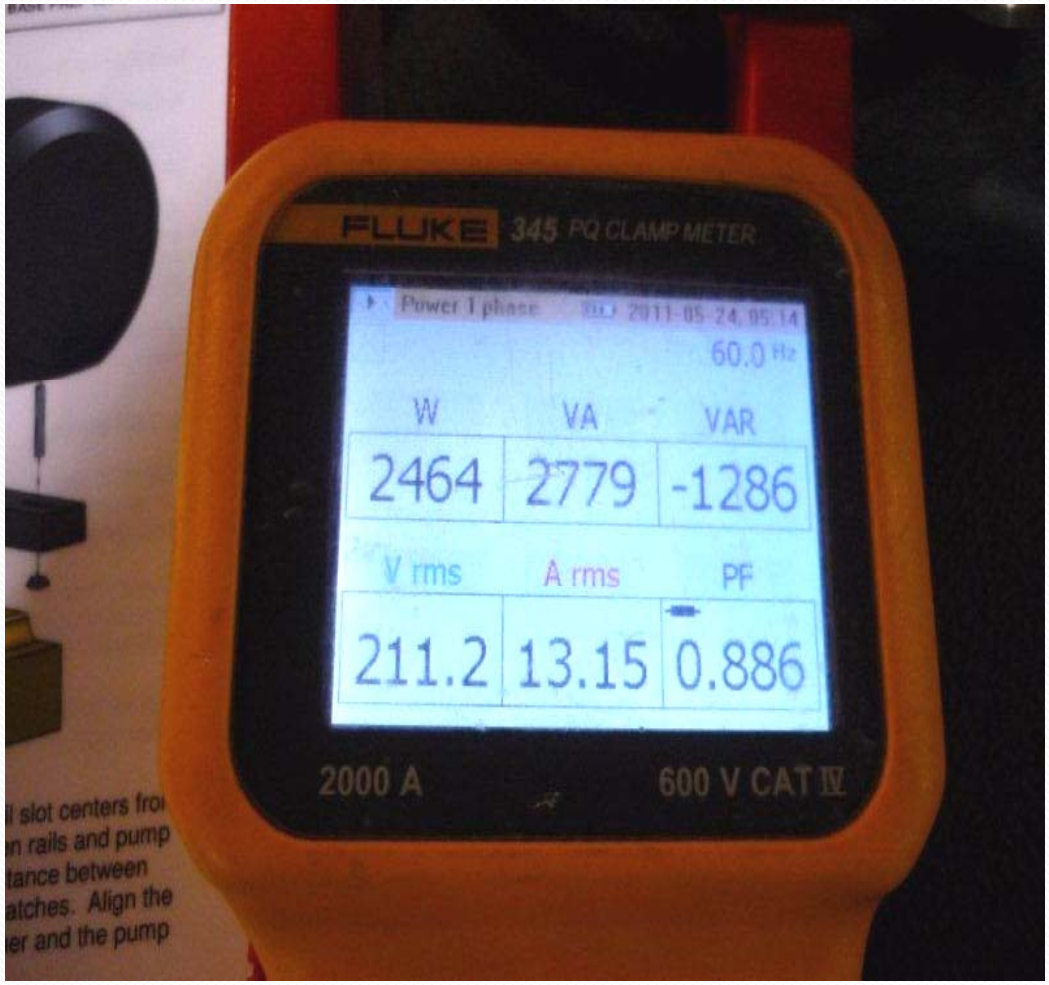

FLUXDRIVE

Example – Throttling at 35%

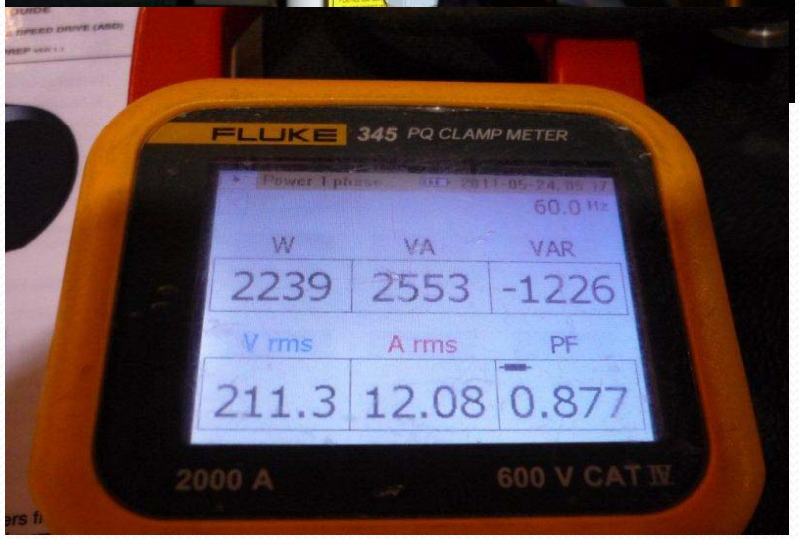

FLUXDRIVE

Example – ASD at 40%, Valve Open

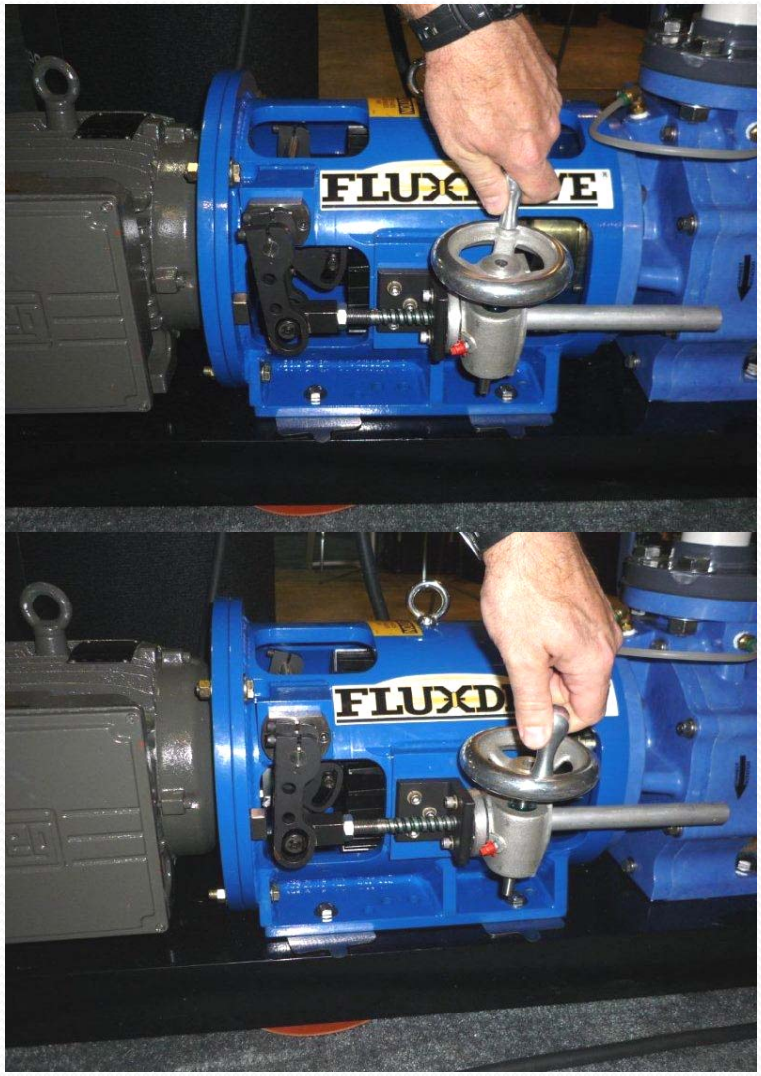

FLUXDRIVE

Example – ASD at 35% Flow Reduce with 39% Power Savings

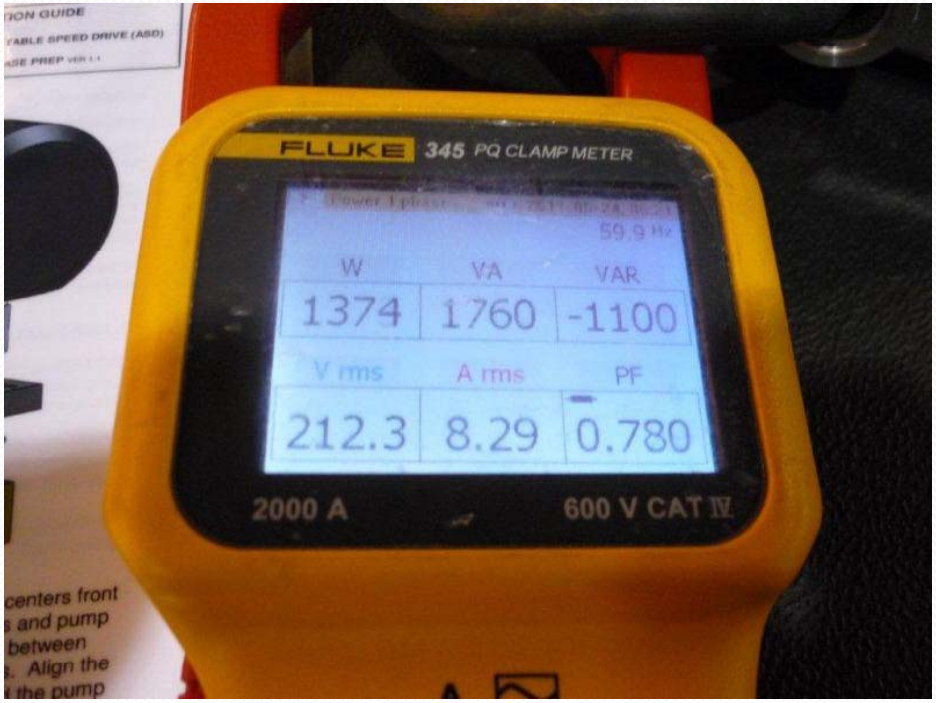

Power Savings = 2239 (valve) – 1374 (ASD) = 865 watts (39 percent)

FLUXDRIVE

Major Problems with Throttling Valves

- Wasted Energy
- Higher Noise & Vibration on Pump and Piping
- Increased Wear / Tear – Pump, Piping & Valves

<u>NOTE</u>: Previously the only mechanical option for flow control – and most common

FLUXDRIVE

Types of Variable Speed Devices

- Direct Current (DC) Motors – Phased Out
- Eddy Current Drives (Electro-Magnets to Copper Drum Assembly – Phased Out)
- Variable Frequency Drives – electronic, computer board design (Optimized over last 10 years)
- Mechanical based VSD – using Permanent Magnets and Induction Rotor Design, Flux Drive

FLUXDRIVE

Variable Frequency Drive (VFD)

Varies Speed of the Motor & Pump - by changing the motor's speed electronically (Adjusts frequency & voltage)

+ No Throttling (open valves)
+ Provides variable speed control to reduce flow as required
+ Manual /Automatic control that **Saves Energy**
- Introduces noise / vibration
- Creates electrical harmonics
- Creates stray shaft current that damage bearings
- Sensitive to harsh environments – power interruptions, heat, moisture, salt, water, etc.
- Critical systems need a by-pass motor controller (< 7 year life)

FLUXDRIVE

The mechanical, ASD - Flux Drive

Varies Speed of the Pump (only) – Installs between the Motor and the Pump (a totally Mechanical Solution)

+ No Throttling (open valves)
+ Provides variable speed control to reduce flow as required
+ Manual /automatic control that **Saves Energy**
+ No harmonics (no inverter duty motor needed)
+ Reduced noise and vibration
+ Easy to operate and understand
+ Operates in harsh environments – marine, salt, water, etc.
+ 98.5% Efficient at full power (> 20 year life)
+ Eliminates coupling failures and need for precision alignment
- Flux Drive 'In-line' ASD – motor needs to be moved to fit ASD

FLUXDRIVE

The mechanical ASD Solution

Motor

CONSTANT SPEED

Flux Drive ®

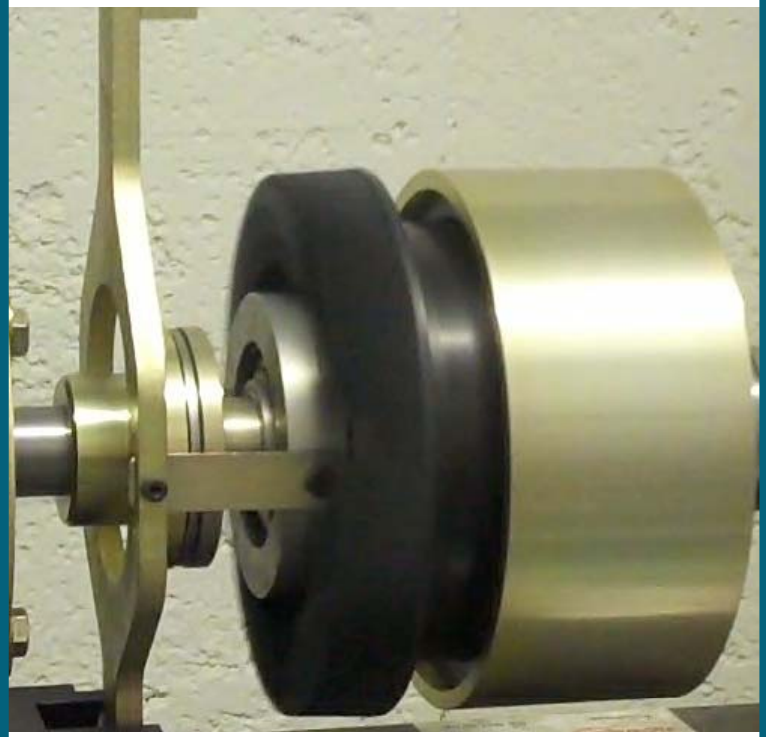

ASD

Pump

VARIABLE SPEED

- Connects Constant Speed Motor to Variable Speed Load with Patented technology using rare earth magnets.
- Provides up to 75% Energy Savings

How we Do It

Patented Permanent Magnet, Induction Rotor Technology

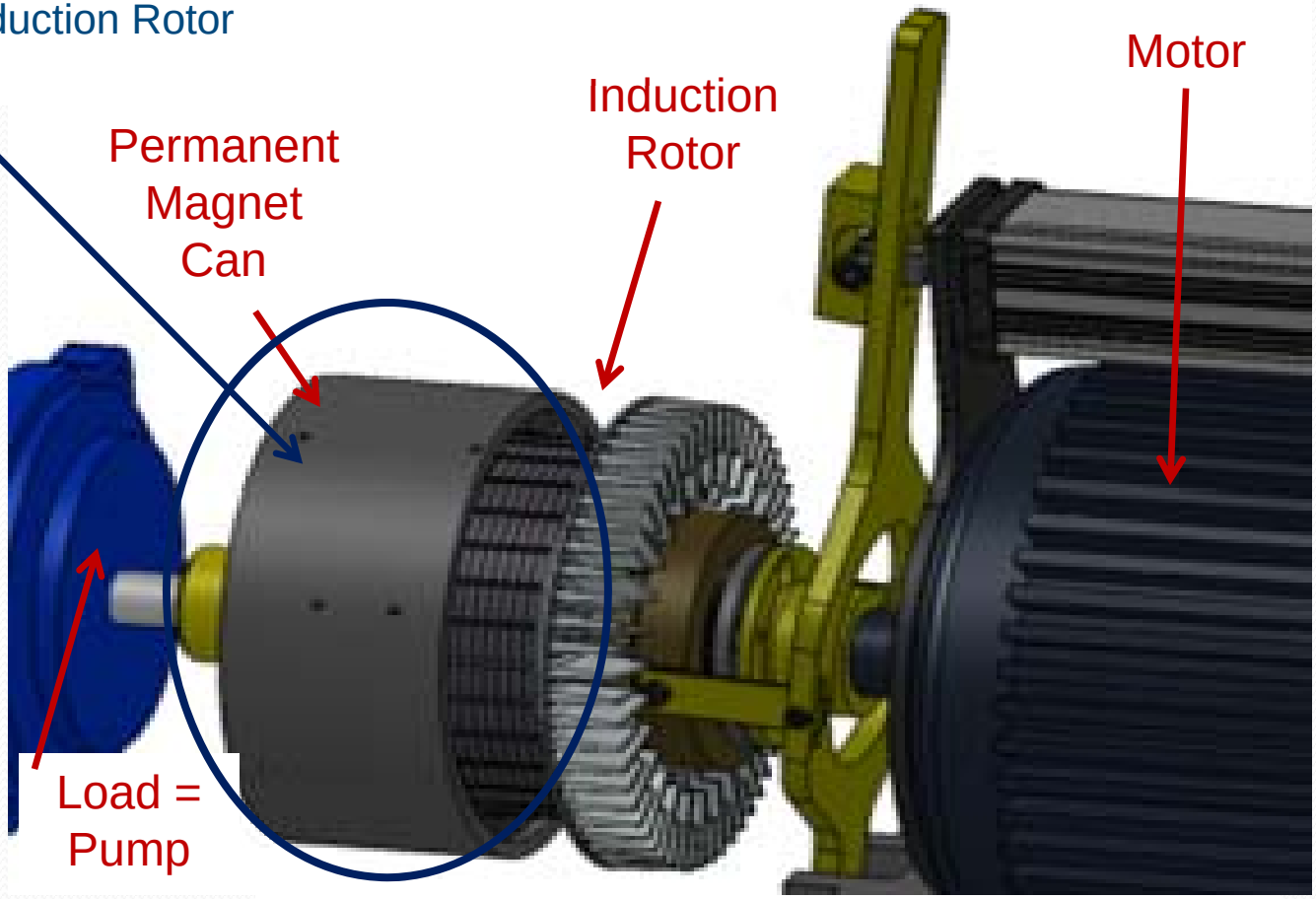

- Rotor is in Can – load goes to full speed
- Rotor is out of Can – load goes slower

ASD / Coupling Components

- Patented - Induction Type Rotor Design (i.e., NOT eddy current which is much less efficient)
- Magnetic Can with Permanent Magnet Array

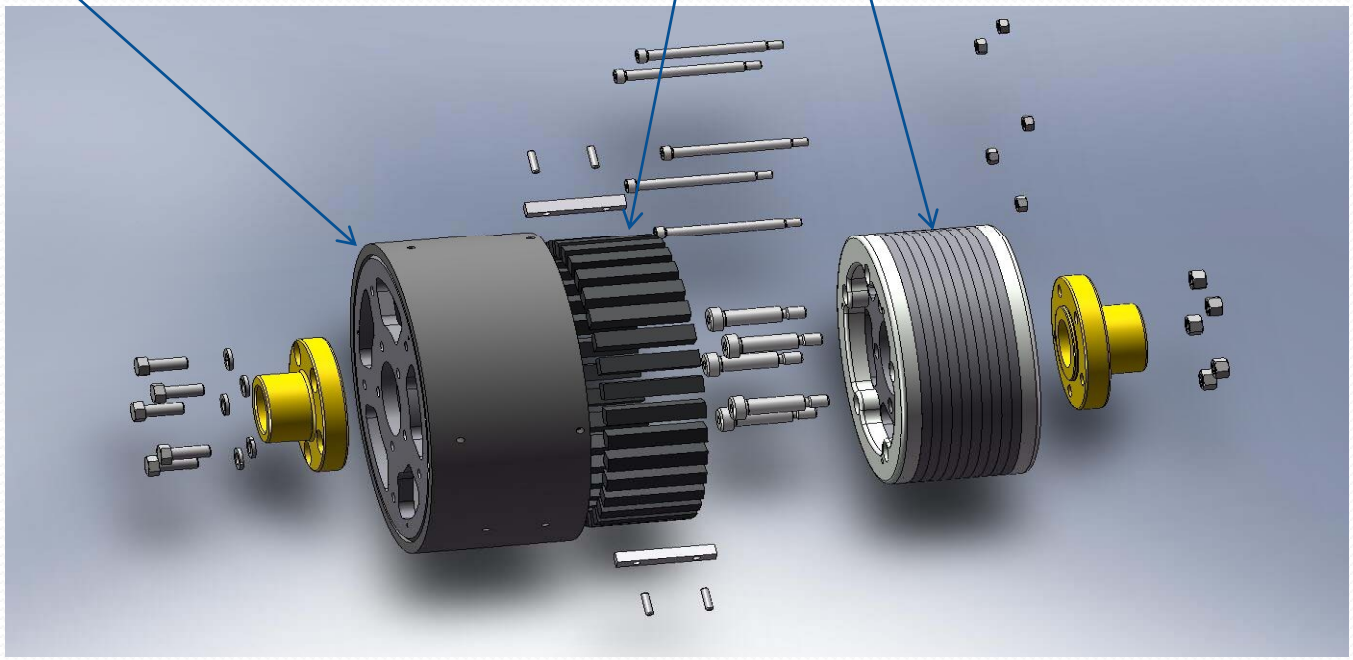

FLUXDRIVE

Flux Drive

Adjustable Speed Drives

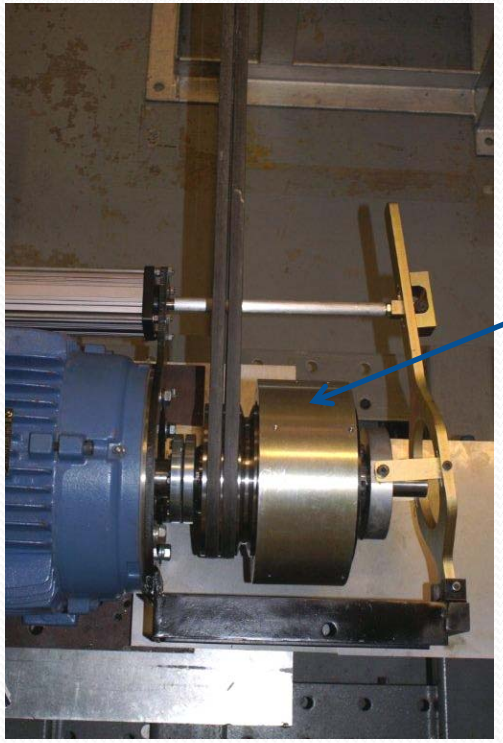

Belt Driven (ASD)

Sheave adaptor on back of Magnet Can

In-line (ASD)

Installs between motor and pump

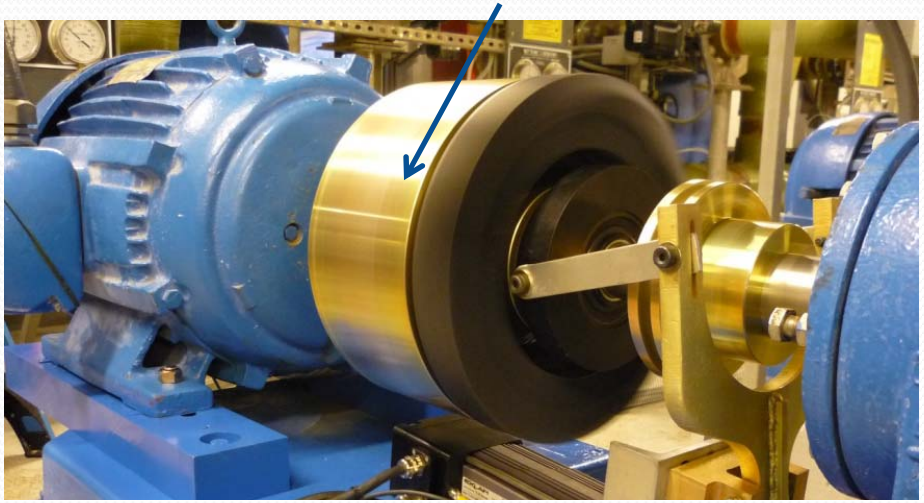

FLUXDRIVE

Flux Drive ASD – Close Coupled

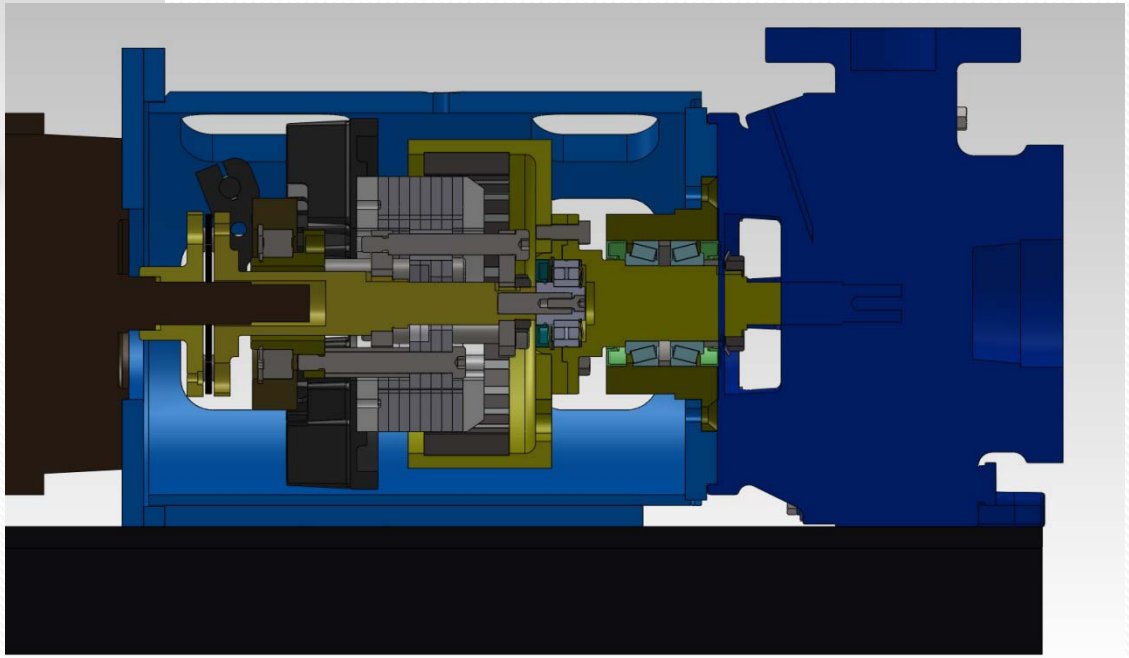

FLUXDRIVE

Flux Drive ASD – Belt Drive

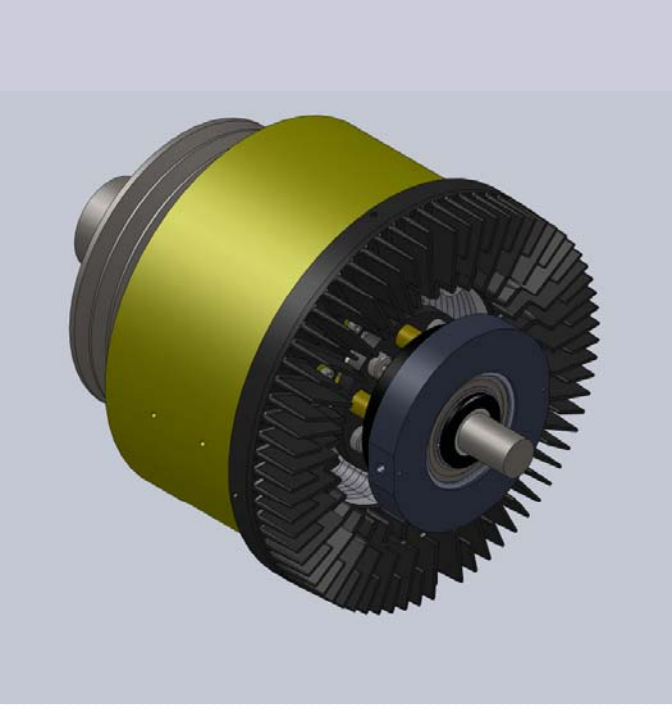

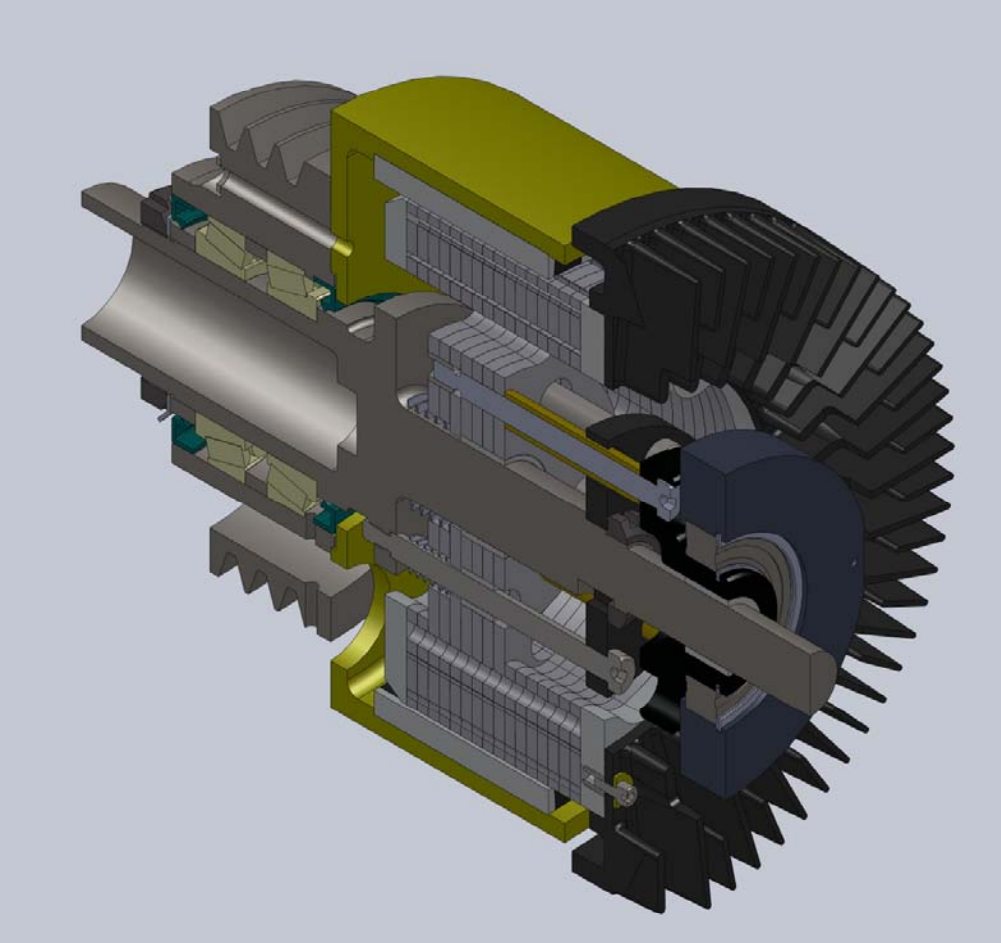

FLUXDRIVE

Flux Drive ASD – Vertical Pump

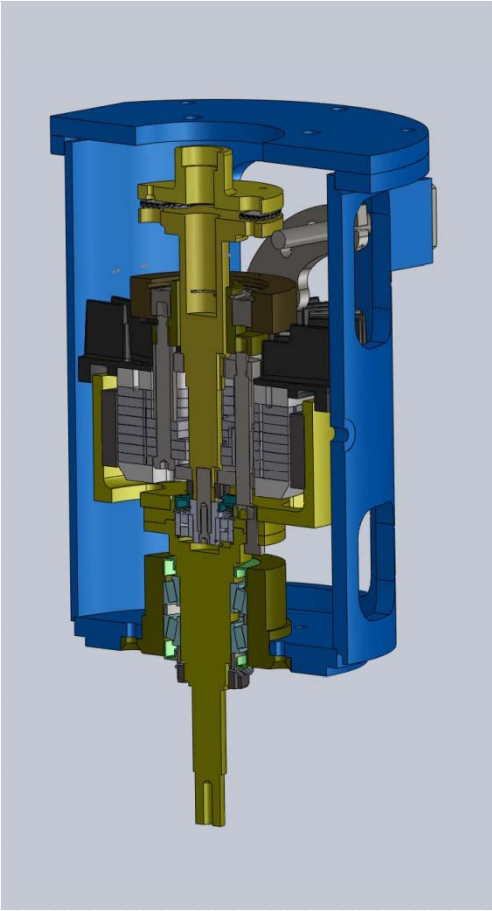

FLUXDRIVE

Product Comparison

Product Feature	FLUXDRIVE	Eddy Current Drives	VFD's Hitachi, Toshiba, GE, Baldor, Honeywell, Emerson, ABB	Throttle Valves and Dampers
Smaller size per unit of torque output	Yes	No	—	—
Easy to install, Easy to maintain	Yes	No	No	No
Fewer moving parts	Yes	No	—	No
Runs in rain, dirty or hot environments	Yes	Yes	No	Yes
Damaging Harmonics / Vibration - Cavitation	No	No	Yes	Yes

Energy Savings – Grant Programs

Local Power Providers are offering Energy Grants that provide typically 50-70% cash grants to offset the ASD installations. Also note:

- ESG (The Energy Solutions Group) has designed custom programs to finance Flux Drive ASD systems with No Capital Equipment budget required
- Current Power Companies we are working with: AEP, KEMA, Tacoma Power, Puget Sound Energy, Bonneyville Power, BC Hydro and growing ..

FLUXDRIVE

Questions ?

www.FluxDrive.com

FLUXDRIVE®

Installations / Customers

SEATTLE AQUARIUM

TACOMA POWER

HOUSTON ZOO

COLUMBUS ZOO AND AQUARIUM

YMCA of Pierce and Kitsap Counties

EVERGREEN
THE EVERGREEN STATE COLLEGE
OLYMPIA, WASHINGTON

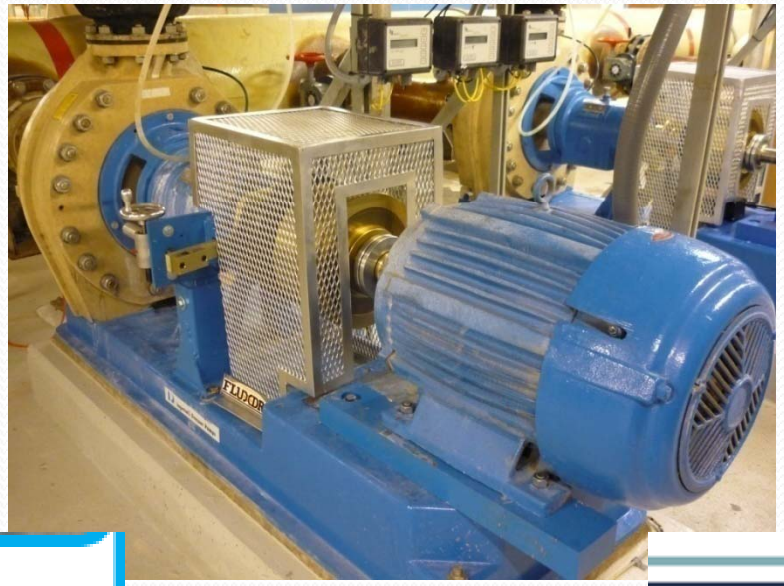

MOODY GARDENS
GALVESTON ISLAND

vancouver aquarium™

THERMO FLUIDS™
The Responsible Solution

VULKAN DRIVE TECH

Cloward H2O
consulting engineers and designers

BC hydro powersmart

PSE PUGET SOUND ENERGY
The Energy To Do Great Things

FLUXDRIVE®

Contact Information

Chip Corbin, CEO/Founder — Chip@FluxDrive.com
Rich Braun, Design Engineer — Rich@FluxDrive.com
Libby Dunkin, VP Operations — Libby@FluxDrive.com

Flux Drive, Inc. (Main Office)
14209 29th Street East
Suite 105
Sumner, WA 98390
Tel: 253.826.9002
Fax: 253.826.9004

Flux Drive (Testing Facility)
13701 24th Street East Business Park
Suite E8
Sumner, WA 98390

www.FluxDrive.com

FLUXDRIVE®

Flux Drive Company Overview

- Headquarters: Seattle, WA
- Founded
  - Engineering Services – 1988
  - Flux Drive products – 2007
- Product Line
  - Adjustable Speed Drive
  - Soft Start Coupling
  - In-line, belt sheave, close-coupled configurations
  - 0-60HP now, 0-200 HP – Q3 2011

FLUXDRIVE

Performance

- Operates with less than **2**% slip at full power / HP
- Design operating temperature of the air cooled rotor is less than 50 degrees F rise above ambient at full power / HP
- Maximum torque of the 'soft-start' coupling is limited to 140% of design torque (motor current) during the start-up transient and full power operation
- The Flux Drive ® design **does not** use 'eddy currents' like other permanent magnet couplings and is therefore more efficient (i.e., 98.5 % +)
- Develops much higher torques than permanent magnet –to-magnet couplings (i.e., scaling to 1000 hp +)

FLUXDRIVE

Flux Drive® ASD features

- Provides adjustable speed control that saves energy like other ASDs (i.e., VFDs, Eddy-current drives, etc.) due to following pump or blower affinity curves
- Allows for slow and controlled starting, either manual or automatic, with a linear actuator / controller
- Can operate in highly sensitive and harsh environments and **does not create harmful electrical harmonics**
- Has all the other benefits noted with the Flux Drive® 'soft-start' coupling

FLUXDRIVE

OTHER Flux Drive® Products

- The Adjustable Speed Drive (ASD)

Can with Magnets

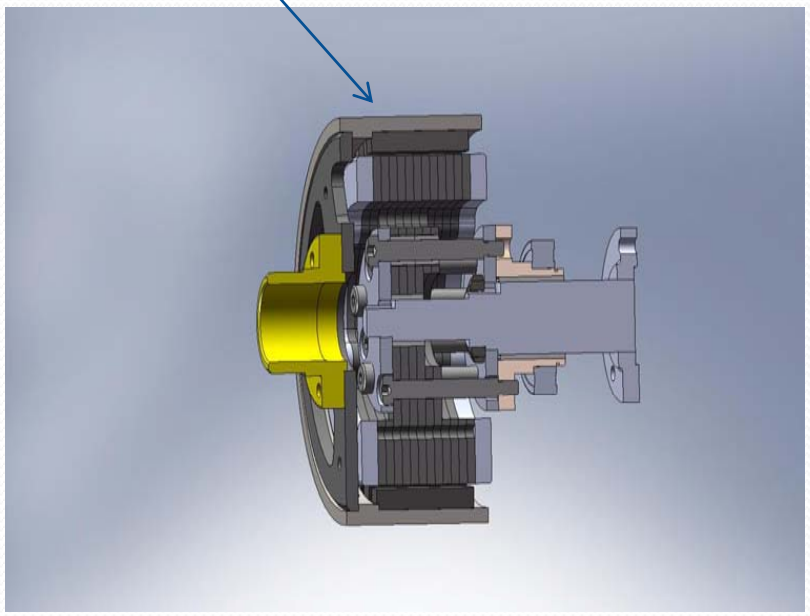

Movable Induction Rotor (in – out of can)

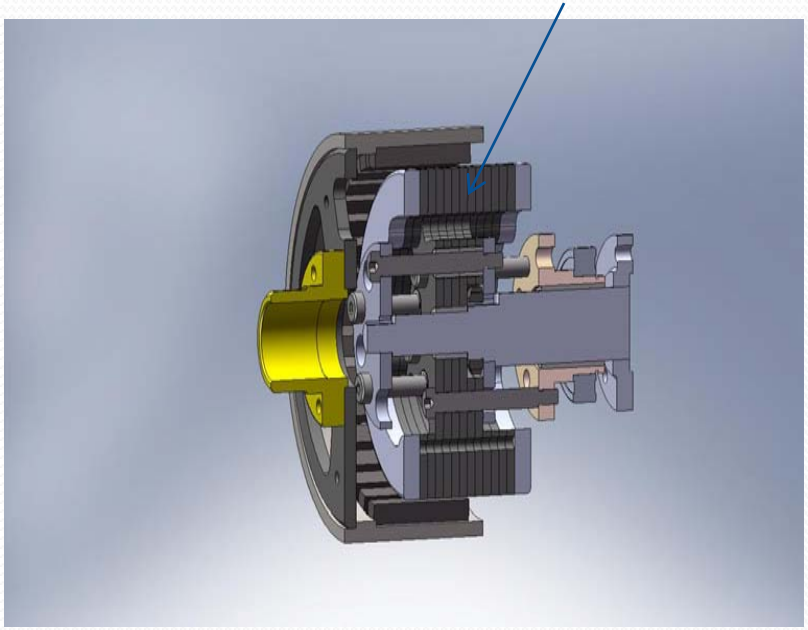

FLUXDRIVE

The Adjustable Speed Drive (ASD)

From Coupling to ASD

Fully Engaged

Rotor Disengaged

By changing the percentage of overlap of the Can and Rotor, you control the transfer of torque between the two members

FLUXDRIVE

The Flux Drive® Adjustable Speed Drive (ASD)

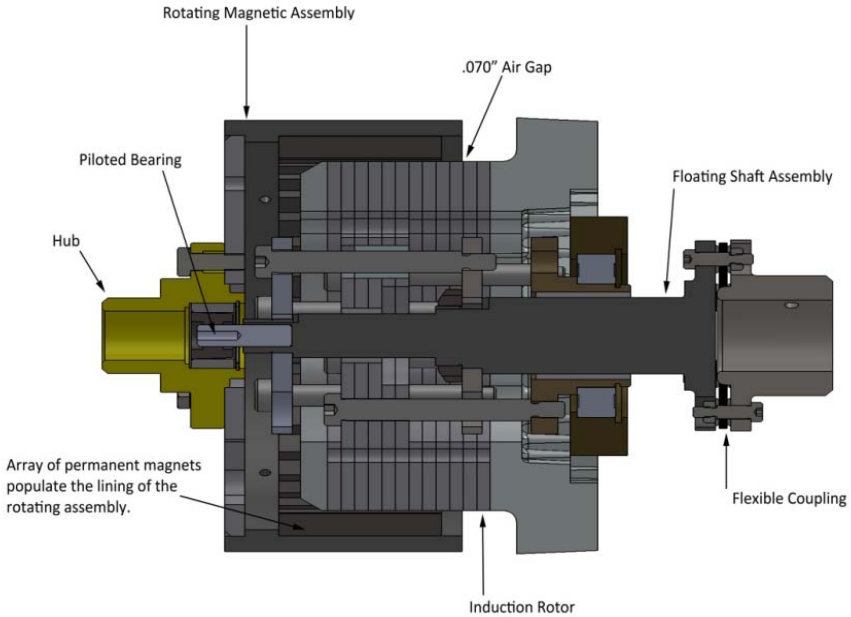

Constant magnetic flux is provided by the magnetic circuit via a circular array of alternate polarity permanent magnets supported inside a steel can assembly that rotates with the devices output shaft. The induction rotor on the input shafting is then moved into (to increase speed) or out of (to decrease speed) the high strength magnetic flux of the output magnet assembly. The overlap of the magnetic flux onto the induction rotor induces current in the rotor's array of electro-conductive material. This inductive interaction closely follows motor theory and scaling.

Flux Drive Model	Dimensions In / mm			Horse Power Range (Torque lbft)					
Model	A (DBSE)	B (DB Hubs)	C (Working Rad.)	15 HP (45lb-ft)	20 HP (60lb-ft)	25 HP (75lb-ft)	30 HP (45lb-ft)	40HP (60lb-ft)	50 HP (75lb-ft)
08ASD (1800 RPM)	9.58 /(243.4)	13.25 / (336.4)	4.95 / (125.6)	X	X	X			
08ASD (3600 RPM)	9.58 /(243.4)	13.25 / (336.4)	4.95 / (125.6)				X	X	X
Model	A (DBSE)	B (DB Hubs)	C (Working Rad.)	30 HP (90lb-ft)	40 HP (120lb-ft)	50 HP (150lb-ft)	60HP (90lb-ft)	80HP (120 lb-ft)	100HP (150lb-ft)
10ASD (1800 RPM)	12.35 / (313.7)	16.30 / (414.0)	6.00 / (152.4)	X	X	X			
10ASD (3600 RPM)	12.35 / (313.7)	16.30 / (414.0)	6.00 / (152.4)				X	X	X
Model	A (DBSE)	B (DB Hubs)	C (Working Rad.)	55 HP (165lb-ft)	65 HP (195lb-ft)	75 HP (225lb-ft)			
12ASD (1800RPM)	12.85 / (326.4)	16.80 / (426.7)	7.00 / (177.8)	X	X	X			

FLUXDRIVE